Automated dual source systems for measurement of DC resistance standards

Rasha S M Ali, M Helmy A Raouf

(*Dept. of Electrical Quantities Metrology, National Institute for Standards (NIS), Giza 12211-136, Egypt*)

Abstract: A new system for measuring low-ohmic standard resistors through a dual current sources bridge is introduced. It is used for low resistance measurements from 1 mΩ to 1 Ω at 1 : 1 ratio, which is suitable for the laboratories without cryogenic current comparators (CCC) or direct current comparators (DCC) bridges. Behavior of this bridge is evaluated by comparing its measured values with the unknown resistor values obtained by another method. The accuracy of the introduced bridge is in the level of 10^{-5} for the 1 mΩ resistor, and in the level of 10^{-4} for the 10 mΩ, 100 mΩ and 1 Ω resistors. Moreover, a dual voltage sources system for the measurement of DC standard resistors from 1 kΩ to 100 MΩ is also presented. In this system, a modification is made on the modified Wheatstone bridge to evaluate its performance by adding another digital multimeter to measure the ratio between the unknown and the standard resistors simultaneously. This bridge is verified by comparing the measured values of 10 kΩ resistor obtained by the two methods with its actual value. The bridge accuracy is in the level of 10^{-6} except for the 1 kΩ resistor, and the bridge asymmetry is also evaluated. It is found the asymmetry is in the level of 10^{-6} for the resistors from 10 kΩ to 100 MΩ and in the level of 10^{-5} for 1 kΩ resistors. The introduced bridges operations are controlled by LabVIEW programs designed specially for this purpose, and the expanded uncertainty is also evaluated for all measurement results.

Key words: direct current comparators; voltage null detector; modified Wheatstone bridge; ratio technique; resistance measurements; uncertainty

CLD number: TM934.12 **Document code**: A

Article ID: 1674-8042(2019)02-0109-07 **doi**: 10.3969/j.issn.1674-8042.2019.02.002

0 Introduction

Resistance measurement is considered as one important task to accurately determine the ohmic values of the low and high ohmic resistors. Low standard resistors are used in some power industry applications such as measuring the high direct and alternating currents[1]. At National Metrology Institutes (NMIs), the most common method for the standard resistors calibration is the resistance bridges based on cryogenic current comparators (CCCs). The CCC bridge simply consists of two current sources which drive currents through the unknown resistor R_x and the standard resistor R_s by the primary and the secondary windings of the CCC[2]. It is fixed with very sensitive superconducting quantum interference device (SQUID) as the magnetic flux detector in the CCC. For NMIs without CCC, direct current comparators (DCC) is used for resistance measurements of up to 10 kΩ. For low-ohmic resistors measurements from 100 μΩ to 100 mΩ, DCC is used in conjunction with range extender and DC power supply[3]. The resistor R_x is connected to the primary circuit and R_s is connected to the secondary circuit. The DCC resistance bridge is balanced by adjusting the primary turns for a null condition on detector nV using the reversal balancing procedure[4].

There are other different methods used for measuring the low resistance standards in the secondary laboratories but with lower capabilities[5]. Some of these methods are direct reading with a digital multimeter (DMM) and substitution method where R_s and R_x are indirectly compared. They are supplied by a constant current and a DMM is used to measure the voltage drop across the resistors. There is also volt-ampere-metric method where a current source is used to supply the circuit and a DMM is applied to measure the voltage drop across the resistor[5]. The ratio technique method is also used, where R_s and R_x are directly compared by using a DMM in its ratio mode[6]. Some of these methods

Received date: 2019-02-18

Corresponding author: Rasha S. M. Ali (rasha_sama79@hotmail.com)

have some disadvantages like their dependency on the linearity and the accuracy of the used instruments[7].

Intermediate and high resistance measurements were considered as the main works at the National Institute for Standards (NIS), Egypt in the past years. The aim of these works is increasing the accuracy and reducing the uncertainty of the measurement results, which is transferred to other standard resistors and commercial devices. There are a lot of different methods for measuring the high resistance standards such as in Refs. [8-9]. The modified Wheatstone bridge method is the most known and used method, which depends on high resistance comparison with low uncertainty[10]. Two resistive arms in the modified Wheatstone bridge are replaced by two programmable voltage calibrators[11]. By adjusting one or both of the voltage sources, the balance of the bridge can be obtained and sensed by a null instrument which is either voltage detector or a current detector[10].

In this paper, new automated systems are designed by using dual sources. One of them is used for the low-ohmic resistors measurements in the range of 1 mΩ—1 Ω with acceptable accuracy which is suitable for the secondary laboratories. Another system as the modified Wheatstone bridge consisting of dual voltage sources is also established at NIS to improve capabilities. However, there is a modification to be done in this bridge to help in evaluating its performance with another method at the same time. The introduced dual source bridges are fully automated systems controlled by a LabVIEW programs which have been designed for this purpose. The set-up of the introduced dual source bridges is described in this work. The measurement method and results are also introduced. The bridges verifications are done through two different means. One of them is done by the calculation of the bridge asymmetry error and the other is made with another method simultaneously by the comparison of resistance measurement results obtained from the two methods with their actual values. Furthermore, the uncertainty budgets and the associated expanded uncertainties are estimated for the obtained measurement results.

1 Measurement systems with double sources

Construction of the presented systems used for low and high standard resistors measurements from 1 mΩ to 10 MΩ is described in the following sub-sections.

1.1 Measurement system of low-ohmic standard resistors

The system designed to measure the low resistance standards consists of two DC current sources, sensitive voltmeter, R_x and R_s to establish a dual current source bridge system as shown in Fig. 1. One of the DC current sources is used to pass DC current I_x through R_x. The other DC power supply supplies R_s with variable DC current I_s until the balance condition occurs between the two resistors.

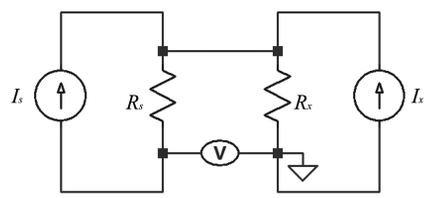

Fig. 1 Compensation system with dual current sources

The sensitive voltmeter (V) is used as a voltage null detector to indicate the bridge balance condition. The input impedance of the used voltmeter is very high to insure its high sensitivity with greater than 10 GΩ and 5 nF[12]. Coaxial shielded cables are used and the system is also connected to a single ground point to reduce the noises and eliminate the thermal voltages[7].

The measurement procedures are done automatically by a LabVIEW program, which is designed for this purpose. I_s is changed in steps with the sequence set in the program until balance occurrs. The number of measurements is also selected in the program. In this measurement, 10 readings are recorded at each sequence and saved in an excel sheet. After that I_x and I_s are reversed to eliminate the thermal emf and the effect of zero offset[7] and other 10 readings are saved. At the balance condition, the actual values of I_s and I_x are accurately calibrated. R_x is then calculated after choosing the balanced current I_s. At this point the applied currents ratio is equal to the resistance ratio, so R_x can be obtained by

$$R_x = \frac{I_s}{I_x} R_s. \tag{1}$$

1.2 Measurement system of intermediate and high-ohmic standard resistors

The modified Wheatstone bridge[4] is done by substituting the two arms of resistors with two DC voltage sources. The introduced system in this paper

constructs from two programmable calibrators in their voltage mode to establish a dual voltage sources bridge system as illustrated in Fig. 2.

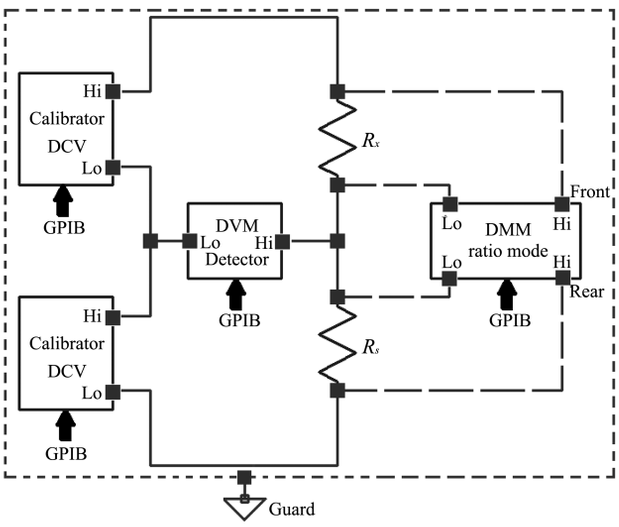

Fig. 2 Dual voltage source bridge

One of the calibrators supplies the unknown resistor R_x with DC voltage V_x. The other one supplies the standard resistor R_s with DC voltage V_s. A digital voltmeter (DVM) is also used as a voltage null detector to indicate the bridge balance. The selected null detector has significantly high input impedance which is greater than 10 GΩ and 5 nF[12] to insure high sensitivity. Furthermore, a modification is made in this bridge by adding DMM in its ratio mode. This modification completes the introduced dual source bridge for the 4-terminal standard resistors. It is added to measure the ratio between R_x and R_s at the balance voltage to measure R_x by another technique at the same time to be compared with the bridge results. Coaxial cables with less dielectric absorption should be used in all connections of the bridge to get rid of the noises[1]. Moreover, it is important to prevent the leakage resistance in the introduced bridge to increase its sensitivity by using two-pin shielded connector, especially in the part connecting between the high terminal of the DVM detector and the low terminals of the R_x and R_s. All the system is also connected to a single guard to eliminate the current leakage.

It is fully automatically measured by using the introduced system through a LabVIEW program, which has been established for this object. The results of the DVM detector and the DMM are automatically stored in an excel sheet. The voltage V_s is automatically changed with the step mentioned in the program until the balance occurrs when the DVM detector readings become close to 0. V_x remains constant during the measurement process. Then, V_x and V_s are reversed to obtain R_x at positive and negative applied voltages to reduce the effect of the thermal emf. 10 readings are recorded in the forward direction and 10 readings are recorded in the reverse direction at each step. V_s and V_x voltage values are accurately calibrated at the balance point. R_x is computed by selecting the voltage V_s to realize the balance point. At this point, the applied voltage ratio is equal to the resistance ratio. The measurement sequence is repeated 10 times at the balance point in the forward and reverse directions. The average is taken to calculate R_x by

$$R_x = \frac{V_x}{V_s} R_s. \tag{2}$$

2 Measurement results

The dual current sources system is used for the measurement of the low ohmic DC resistance standards from 100 mΩ to 1 Ω at 1 : 1 ratio. The measurement is done at environmental conditions with temperature of (23 ± 1) ℃ and humidity of (50±10)%. The values of I_s and I_x are accurately determined when the sensitive voltmeter shows minimum reading which tends to be 0. R_x is then computed from Eq. (1). Table 1 shows the applied currents at the different resistance values and the relative deviations of the measured resistances at 1 : 1 ratio.

Table 1 Relative deviations for measured resistors

Nominal resistance value	Applied current (A)	Relative deviation
1 mΩ	15	-2.7×10^{-5}
10 mΩ	7	-7.7×10^{-4}
100 mΩ	1.5	2.4×10^{-4}
1 Ω	0.25	11×10^{-4}

For intermediate and high resistance ranges, the dual voltage sources system is used for DC resistances measurement from 1 kΩ to 100 MΩ. The measurement is done at 1 : 1 ratio for resistance standards from 1 kΩ to 10 MΩ. Resistors of 10 MΩ and 100 MΩ are measured at 10 : 1 ratio. The measurement is done at temperature of (23 ± 1) ℃ and humidity of (50 ± 10)%. It is found that R_x at positive and negative applied voltages are close to each other, which indicates the low noise of the system due to using coaxial and low thermal emf cables.

The accurate value of V_s is determined when the

balance is obtained and the DVM detector reading tends to 0, then R_x is calculated by Eq. (2). Table 2 shows the relative deviations of the measured resistances at 1 : 1 ratio.

Table 2 Measurement results at 1 : 1 ratio

Nominal resistance value	Applied voltage (V)	Relative deviation
1 kΩ	1	8.4×10^{-5}
10 kΩ	1	-1.9×10^{-6}
100 kΩ	10	-1.8×10^{-6}
1 MΩ	10	-2.2×10^{-6}
10 MΩ	10	-2.0×10^{-6}

Measurement of the 10 MΩ resistor is repeated again at 10 : 1 ratio. V_x and V_s are 10 V and 1 V respectively for 10 MΩ and 100 MΩ measurements at 10 : 1 ratio. It is found that difference between the measured values at 1 : 1 ratio and 10 : 1 ratios is 0.6 μΩ/Ω, which means that the measurements at the two ratios are comparable, so ratio 10 : 1 could be used for measuring the 100 MΩ standard resistor. Table 3 shows the relative deviations of the measured resistances at 10 : 1 ratio.

Table 3 Measurement results at 10 : 1 ratio

Nominal resistance value (MΩ)	Relative deviation
10	-3.2×10^{-6}
100	-4.0×10^{-6}

3 Bridges evaluation

Evaluations of the double current sources and the dual voltage sources bridges are described in the following sub-sections. It is done to evaluate the accuracy level of the two bridges.

3.1 Evaluation of low resistance standards bridge

The introduced bridge behavior is evaluated by comparing its measured values with the unknown resistors values obtained by another method. Their values are obtained by comparison to the NIS 1 Ω standard resistor using DCC bridge with range extender and DC source. The NIS 1 Ω standard resistor is regularly calibrated by comparison with the International Bureau of Weights and Measures (BIPM) reference standards known in terms of the recommended value of the von Klitzing constant. Table 4 shows the relative deviation between the measured values obtained by the introduced bridge and the measured values obtained by the DCC bridge.

Table 4 Relative deviations for measured resistors

Nominal resistance value	Relative deviation
1 mΩ	-5.1×10^{-5}
10 mΩ	-8.8×10^{-4}
100 mΩ	1.8×10^{-4}
1 Ω	11×10^{-4}

It is found that the order of the relative deviation between the methods for the 1 mΩ range is relatively small. The relative deviation order then increases at the 1 Ω range. These results reflect the high accuracy and reliability of the introduced bridge especially at the lower resistance ranges.

3.2 Evaluation of intermediate and high resistance standards bridge

The performance of the introduced bridge is verified in its results. It is evaluated by two ways. One of them is done by determining its asymmetry and the other is done by comparing the measurement results obtained at the balance point by using the dual sources simultaneously with the results obtained by measuring the direct ratio between the unknown and standard resistors. And the obtained results are then compared with their actual values. For the evaluation of the bridge itself, its asymmetry is determined by[13]

$$\text{Bridge asymmetry error} \cong \left(\frac{r_1+r_2}{2}\right)-1, \quad (3)$$

where r_1 is the ratio of $R_x : R_s$, r_2 is the ratio of $R_s : R_x$ which is determined by exchanging their positions and repeating the measurement again. The bridge asymmetry is only calculated for 10 MΩ measurements. Table 5 demonstrates the bridge asymmetry for the resistors from 1 kΩ to 10 MΩ. Bridge asymmetry is one of the uncertainty sources and is put into consideration in the uncertainty budget.

Table 5 Asymmetry error of bridge

Nominal resistance value	Relative bridge asymmetry error
1 kΩ	5.0×10^{-5}
10 kΩ	-5.2×10^{-6}
100 kΩ	-3.0×10^{-6}
1 MΩ	2.0×10^{-6}
10 MΩ	-2.7×10^{-6}

The bridge asymmetry at 1 kΩ is slightly high may be due to wiring effect, so it is not recommended to use in resistor below 10 kΩ. The bridge is also evaluated by comparing its obtained results with the

corrected and traceable results obtained from measuring the ratio between R_x and R_s directly using the added DMM at the balance point at the same time. R_x in this case is calculated by

$$R_x = r_r \cdot R_s, \tag{4}$$

where r_r is the ratio reading of the DMM in its ratio mode.

The measured values of R_x obtained by the two methods are compared with its actual values. Taking 10 kΩ resistor as an example, NIS has two resistance standards which are regularly calibrated by comparison with BIPM reference standards. One of them is considered as the unknown resistor and measured by the introduced dual source bridge. The obtained values by the two methods are then compared with its actual value. It is found that the relative deviation between the measured value and its actual value obtained by dual source method is -2.9×10^{-6}. However, the relative deviation between the measured value and its actual value obtained by the direct ratio method is -2.5×10^{-5}. This result reflects the high accuracy and reliability of the introduced dual source bridge.

For measurement of the standard resistors of 10 Ω and 100 Ω, it is found that the measurement accuracy is in the order of 10^{-3} by using the two introduced bridges may be due to some errors such as the residual flux, so it is recommended to measure such values by CCC or DCC bridges.

4 Uncertainty estimation

The uncertainty of measurement results is evaluated according to the Guide to the Expression of Uncertainty in Measurement (GUM)[14]. There are several factors that effect on the measurement process accuracy. Some are related to R_s and the others are related to the bridge components. The sources of uncertainty are carried out with Type A and Type B. Type A is evaluated by statistical methods and has normal distribution. Type B is evaluated by other means and usually has normal or rectangular distribution. In these measurements, uncertainty of Type A is computed for 10 values of R_x, whereas Type B has many contributions as mentioned in Table 6 for the 10 kΩ resistor as an example. The combined uncertainty (U_c) is obtained by calculating root sum squares of uncertainty contribution of Type A and Type B components. The expanded uncertainty (U_{exp}) is then obtained by multiplying the combined uncertainty by the coverage factor($k=2$) for confidence level of 95%.

Table 6 Uncertainty budget for 10 kΩ resistor

Quantity, X_i	Probability distribution/ method of evaluation	Standard uncertainty ($\mu\Omega/\Omega$)	Divisor	Uncertainty Contribution $U(R_i)$ ($\mu\Omega/\Omega$)
Repeatability	Normal/A	0.26	1	0.26
Calibration of R_s	Normal/B	0.034	2	0.017
Drift of R_s	Rectangular/B	0.038	$\sqrt{3}$	0.022
Temp. coefficient of R_s	Rectangular/B	0.087	$\sqrt{3}$	0.05
Power coefficient of R_s	Rectangular/B	0.12	$\sqrt{3}$	0.069
Voltage coefficient of R_s	Rectangular/B	0.000 1	$\sqrt{3}$	5.8×10^{-5}
DVM detector sensitivity	Rectangular/B	0.17	$\sqrt{3}$	0.096
Bridge asymmetry error	Rectangular/B	5.2	$\sqrt{3}$	3.03
V_s Source stability	Rectangular/B	1.3	$\sqrt{3}$	0.75
V_x Source stability	Rectangular/B	1.3	$\sqrt{3}$	0.75
Combined standard uncertainty U_c($\mu\Omega/\Omega$)			3.23	
Expanded uncertainty, $k=2$ ($\mu\Omega/\Omega$)			6.5	

The expanded uncertainty of the measurement results for the standard resistors that are suitable to be measured by the dual sources bridges are listed in Table 7.

It is found that the expanded uncertainty of the measurement results for resistors from 100 kΩ to 100 MΩ by using the introduced dual voltage sources system is improved and lower than other uncertainties, which are obtained by using other NIS methods as given in Refs. [15-16], especially in the high-ohmic values. It reflects the reliability of the introduced bridge due to its higher accuracy than other methods.

Table 7 Expanded uncertainties of resistors measurement

Nominal value	Expanded uncertainty ($k=2$) ($\mu\Omega/\Omega$)
1 mΩ	8.5
10 mΩ	9.1
100 mΩ	6.2
1 Ω	2.2
10 kΩ	6.5
100 kΩ	7.1
1 MΩ	11
10 MΩ	16
100 MΩ	16

5 Conclusion

A double current sources bridge system is constructed and used for the resistance standard measurements in the range from 1 mΩ to 1 Ω. It is evaluated by comparing the obtained results with the results obtained by using DCC for the same unknown resistors. The accuracy of the introduced bridge is in the level of 10^{-5} for the 1 mΩ resistor, and this level is reduced to be in the level of 10^{-4} for the 10 mΩ, 100 mΩ and 1 Ω resistors. The results reflect the acceptable accuracy and reliability of the introduced bridge especially at lower resistance ranges. The dual voltage sources bridge system which is set for intermediate and high resistance measurements improves the capabilities of NIS. This bridge could be used to measure the resistance in ranges from 1 kΩ to 100 MΩ. However it is not recommended to be used in resistors below 10 kΩ due to the cables effects, which effect on the bridge accuracy in these ranges. The relative deviation between the measured value of the 10 kΩ resistor obtained by the introduced dual source bridge and its actual value is -2.9×10^{-6}. All results reflect the high accuracy and reliability of the present systems which are constructed by double current sources and dual voltage sources. It is recommended to measure the standard resistance values of 10 Ω, and 100 Ω by using CCC or DCC because by using the two presented bridges their measurement accuracy level is in the order of 10^{-3}.

References

[1] Rietveld G, Beek J H N V D, Kraft M, et al. Low-ohmic resistance comparison: measurement capabilities and resistor traveling behavior. IEEE Transactions on Instrumentation and Measurement, 2013, 62(6): 1723-1728.

[2] Drung D, Gotz M, Pesel E, et al. Aspects of application and calibration of a binary compensation unit for cryogenic current comparator setups. IEEE Transactions on Instrumentation and Measurement, 2013, 62(10): 2820-2827.

[3] Duane B. Resistance measurements systems w/Sub PPM accuracy-1 μΩ to 1 GΩ. [2018-12-21]. https://mintl.com/wp-content/uploads/1uohm_1Gohm_insert.pdf.

[4] Elmquist R E, Jarrett D G, Jones G R, et al. NIST measurement service for DC standard resistors. NIST Technical Note, 2003, 1458: 75.

[5] Galliana F, Gasparotto E. Analysis of a national comparison in the field of electrical low dc resistance. Measurement, 2014, 52: 64-70.

[6] Raouf M H A, Ali R S M. Study the performance of the AC/DC resistors during their DC and AC measurements. Mapan, 2016, 31(3): 219-224.

[7] Houtzager E, Rietveld G. Automated low-ohmic resistance measurements at the μΩ/Ω level. IEEE Transactions on Instrumentation and Measurement, 2007, 56(2): 406-409.

[8] Lisowski M, Krawczyk K. Resistance scaling from 10 k up to 100 T with new designs of hamon transfer devices. IEEE Transactions on Instrumentation and Measurement, 2013, 62(6): 1749-1754.

[9] Galliana F, Boella G. The electrical DC resistance scale from 100 k to 1 T at IEN. IEEE Transactions on Instrumentation and Measurement, 2000, 49(5): 959-963.

[10] Lenicek I, Ilic D, Ferkovic L. High value resistance comparison using modified wheatstone bridge based on current detection. Measurement, 2013, 46(10): 4388-4393.

[11] Galliana F, Capra P P, Gasparotto E. Evaluation of two alternative methods to calibrate ultrahigh value resistors at INRIM. IEEE Transactions on Instrumentation and Measurement, 2011, 60(3): 965-970.

[12] Low level measurements, precision DC current, voltage, and resistance measurements. [2019-01-10]. http://pdf.directindustry.com/pdf/keithley-instruments/low-level-measurements-handbook-precision-dc-current-voltage-resistance-measurements/1438-426111-_3.html.

[13] Raouf M H A, Kim K T, Kim M S. Measurement of capacitance and resistance using two perfectly synchronized voltage sources. Measurement, 2015, 60: 174-177.

[14] Gupta S V. Evaluation of measurement data — guide to the expression of uncertainty in measurement. New York: Springer, 2008.

[15] Tadros N N, Ali R S M. Automated accurate high value resistances measurement in the range from 100 kΩ to 100 MΩ at NIS. Measurement, 2012, 45(5): 988-992.

[16] Tadros N N, Ali R S M. Improved system for the automatic calibration of standard resistors in the meg-ohm range. Measurement, 2013, 46(7): 2077-2081.

用于测量直流电阻标准的自动双源系统

Rasha S M Ali, M Helmy A Raouf

(国家标准化研究所 电气计量研究所，吉萨 12211-136，埃及)

摘　要： 介绍了一种通过双电流源电桥测量低欧姆标准电阻的新系统，用于 1 mΩ ～1 Ω 之间比率为 1∶1 的低阻值电阻测量。该电桥适用于没有低温电流比较器(CCC)或直流比较器(DCC)电桥的实验室。通过将电桥的实测值与另一种方法得到的未知电阻值进行比较，对电桥的性能进行了评价。该电桥对 1 mΩ 电阻的准确率达到 10^{-5} 级，对 10 mΩ，100 mΩ 和 1 Ω 电阻的准确率达到 10^{-4} 级。此外，利用双电压源系统测量了 1 kΩ～100 MΩ 的直流标准电阻。通过增加另一个数字万用表改进惠斯通电桥以同时测量未知电阻与标准电阻的比值对该系统性能进行了评价。将 10 kΩ 电阻用两种方法获得的测量值与实际值进行对比对该电桥进行了验证。除了 1 kΩ 电阻，电桥对其他电阻的准确率达到了 10^{-6} 级。此外，对电桥的不对称性也进行了评价。实验发现，不对称率对 10 kΩ～100 MΩ 的电阻为 10^{-6} 级，对 1 kΩ 的电阻为 10^{-5} 级。该电桥的操作由专门为此设计的 LabVIEW 程序进行计算机控制，并对所有测量结果的不确定度进行了评估。

关键词： 直流比较器；电压零位计；改进的惠斯通电桥；比率技术；电阻测量；不确定度

引用格式： Rasha S M Ali, M Helmy A Raouf. Automated dual source systems for measurement of DC resistance standards. Journal of Measurement Science and Instrumentation, 2019, 10(2): 109-115. [doi: 10.3969/j.issn.1674-8042.2019.02.002]